BODY, ROCKERS - Z26SPD92AN/AH/BN/BH (C750239)

2026 RZR - RZR PRO S ULTIMATE (R01) - Z26SPD92AN/AH/BN/BH

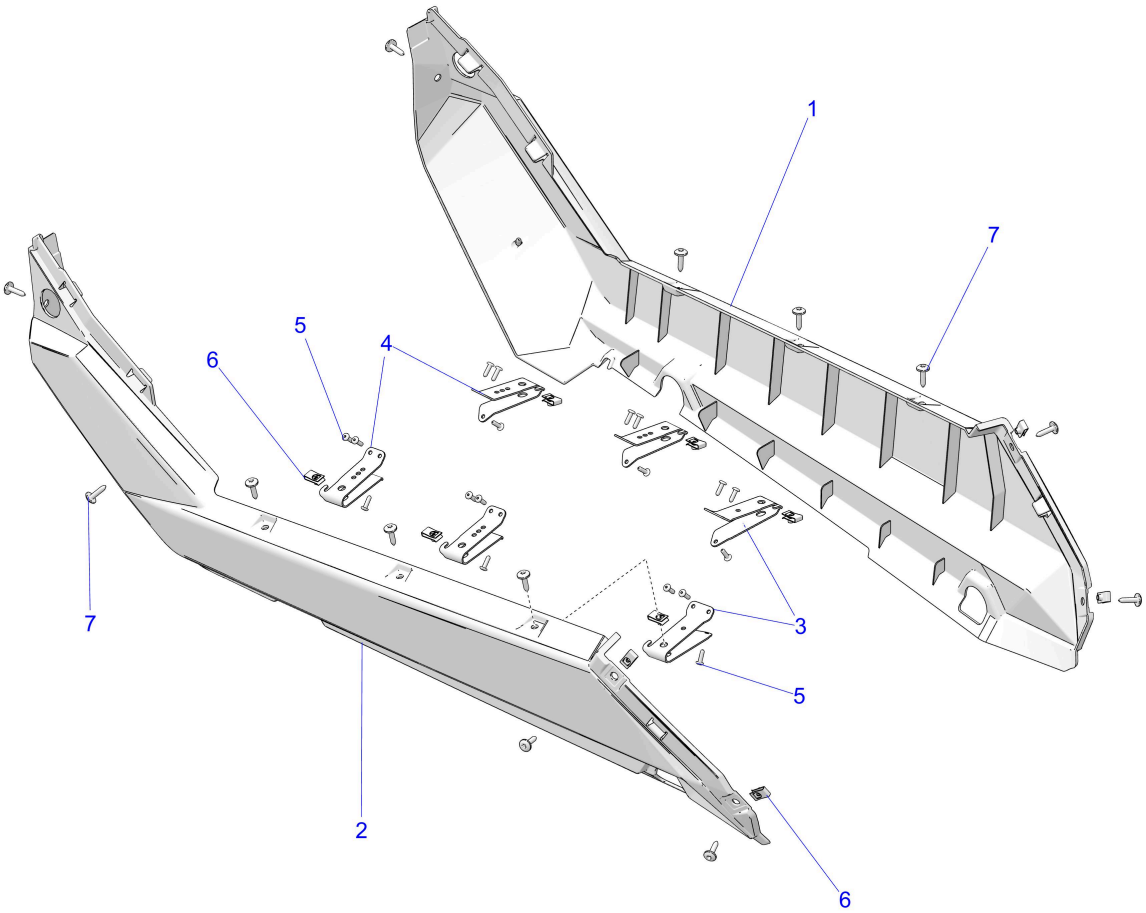

© 2023 Polaris Industries Inc. C750239

Reference #	*Part#*	*Description*	*Quantity*
1	5455171-070	ROCKER-LH,BLK	1
2	5455172-070	ROCKER-RH,BLK	1
3	5269464-329	BRKT-SUPPORT,ROCKER,FRT,ECOAT	2
4	5270828-329	BRKT-SUPPORT,ROCKER,REAR,ECOAT	4
5	7661637	RIVET-3/16-.090-.290	12
6	7081305	CLIP-U SPEED NUT	AR
7	7519650	SCR-TXTH-M6X1.0X25 ZFB	AR

Copyright 1996-2026 Polaris Industries U.S.A All rights reserved.